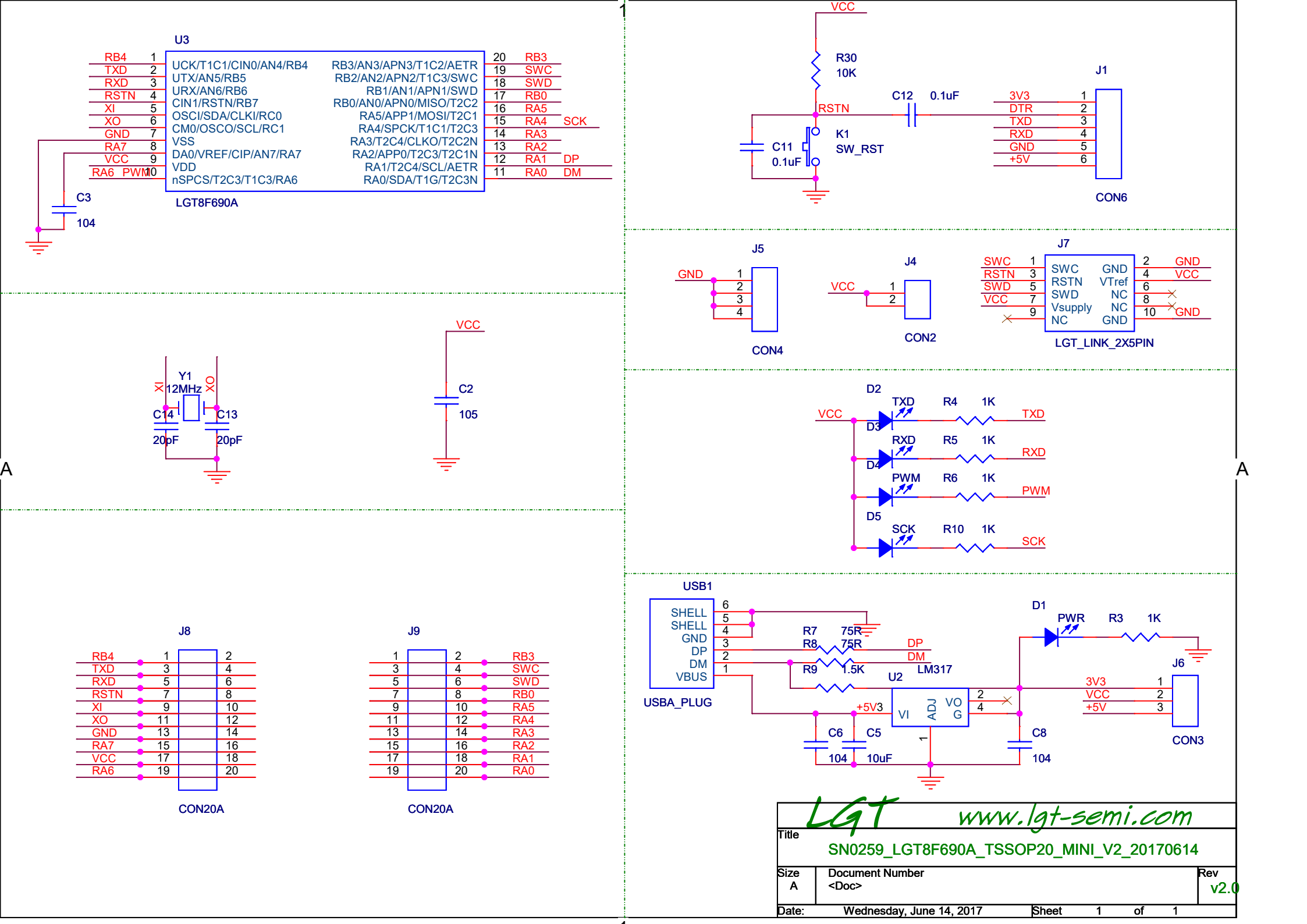
U3
LGT8F690A
UCK/T1C1/CIN0/AN4/RB4
UTX/AN5/RB5
URX/AN6/RB6
CIN1/RSTN/RB7
OSCI/SDA/CLKI/RC0
CM0/OSCO/SCL/RC1
VSS
DA0/VREF/CIP/AN7/RA7
VDD
nSPCS/T2C3/T1C3/RA6
RB3/AN3/APN3/T1C2/AETR
RB2/AN2/APN2/T1C3/SWC
RB1/AN1/APN1/SWD
RB0/AN0/APN0/MISO/T2C2
RA5/APP1/MOSI/T2C1
RA4/SPCK/T1C1/T2C3
RA3/T2C4/CLKO/T2C2N
RA2/APP0/T2C3/T2C1N
RA1/T2C4/SCL/AETR
RA0/SDA/T1G/T2C3N
RB4 TXD RXD RSTN XI XO GND RA7 VCC RA6 PWM
RB3 SWC SWD RB0 RA5 RA4 SCK RA3 RA2 RA1 DP RA0 DM
C3
104
VCC
R30
10K
RSTN
C12 0.1uF
C11
0.1uF
K1
SW_RST
J1
3V3 DTR TXD RXD GND +5V
CON6
J5
GND
CON4
J4
VCC
CON2
J7
SWC RSTN SWD VCC
SWC RSTN SWD Vsupply NC
GND VTref NC NC GND
GND VCC GND
LGT_LINK_2X5PIN
Y1
12MHz
XI XO
C14 C13
20pF 20pF
VCC
C2
105
D2
VCC
TXD R4 1K TXD
D3
RXD R5 1K RXD
D4
PWM R6 1K PWM
D5
SCK R10 1K SCK
USB1
SHELL SHELL GND DP DM VBUS
USBA_PLUG
R7 75R
R8 75R
R9 1.5K
DP
DM
U2
LM317
VI ADJ VOG
+5V3
C6 C5
104 10uF
C8
104
D1
PWR R3 1K
J6
3V3 VCC +5V
CON3
J8
RB4 TXD RXD RSTN XI XO GND RA7 VCC RA6
CON20A
J9
RB3 SWC SWD RB0 RA5 RA4 RA3 RA2 RA1 RA0
CON20A
LGT
www.lgt-semi.com
Title
SN0259_LGT8F690A_TSSOP20_MINI_V2_20170614
Size A
Document Number
<Doc>
Rev
v2.0
Date: Wednesday, June 14, 2017
Sheet 1 of 1